VULKA

FIRE EQUIPMENT

VTS Field Guide:

Ceiling/Overhaul

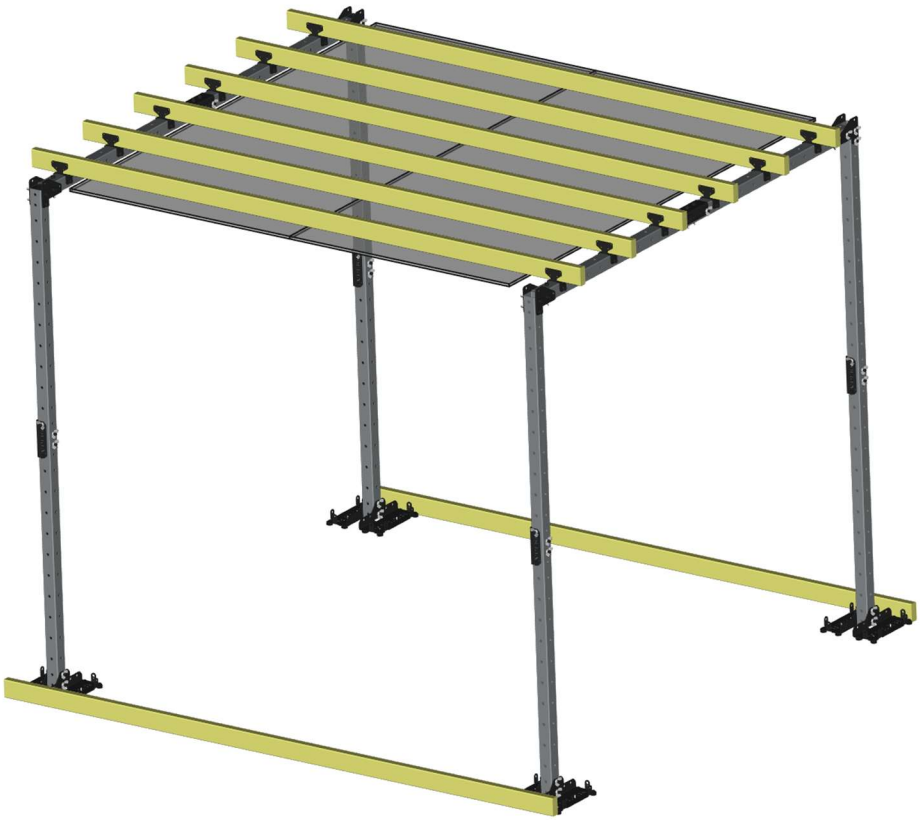

SAFETY PRECAUTIONS

ALWAYS Use Personal Protective Equipment

Always wear appropriate P.P.E. including helmet, gloves, and eye protection when setting up and operating this equipment. Wear hearing protection during the operation of powered equipment.

Never Exceed Weight Limitations

Weight limitations for this equipment are available in this guide. Under most circumstances, this equipment can support 1500 pounds, inclusive of the weight of lumber/sheathing/materials used.

Never Use Damaged Parts

If a part is bent, cut, dented or otherwise damaged, DO NOT use that part. Replacement parts are available by contacting support@vulkafire.com. Paint/powder coat chipping and scratching are expected during normal use and will not affect the equipment operationally.

Always Use Official Vulka Parts and Hardware

Only use parts and equipment designed for this product. Using anything other than Vulka Fire Equipment approved parts will void the warranty and could lead to failure of the system and subsequent injury. Replacement parts are available by contacting support@vulkafire.com.

Do Not Practice Techniques You Have Not Been Trained On

Firefighting is a dangerous job and the techniques involved could lead to injury, even in a controlled environment, if executed poorly or improperly. Always ensure that instructors are trained and competent in the subject matter being practiced and are appropriately trained to instruct.

Do Not Operate Power Tools or Equipment You Are Not Familiar With

Always follow the manufacturer's recommended operating procedures and safety precautions when using power tools and equipment. Failure to do so could result in injury.

Always Use Fall Protection When Operating at Height

Most configurations of this system will not place the user above 4' off the ground. If using a configuration that places personnel above 4', ensure fall protection is provided per OSHA requirements.

Overview

The Vulka Training System can be used to provide a realistic opening up and overhaul experience. Nothing compares to pulling real drywall off of real studs.

Tools & Materials

The following parts and materials will be needed:

- (1) VTS Unit
- Lumber for floor joists. Quantity depends on ceiling size and desired spacing – typically 16” or 24” on center. Chart below shows required lumber depending on spacing.
    - The length of lumber is determined by the desired length of the system. If 8’ drywall is being used, slightly longer lumber needs be selected (e.g. 10’)
- Sheathing for ceiling. Drywall/gypsum wall board. Generally ½” or ¾”. Chart below shows amount needed to cover 1 evolution, depending on system width and lumber length.
- Screws for attaching sheathing to rafters. Drywall screws (2” or greater) are typically okay.
- Screws for attaching lumber to brackets. Metal to wood roofing screws (#8-#14, 1.5” length) are recommended since they provide a gasket to cushion the metal bracket.
- Power drill with bits for roofing screws and drywall screws above.
- Pencil/marker
- A-frame ladder
- 3/8” hex key (*included in Convenience Pack Add-on)*
- Rubber mallet (*included in Convenience Pack Add-on*)
- OPTIONAL:
    - Tape measure or Vulka Spacing Jig (*included in Convenience Pack Add-on*)
    - Metal decking/roofing materials for added realism

Set Up

This Field Guide will cover how to set this configuration up properly:

- Determine desired width of system (4’ or 8’) and desired lumber spacing
    - This determines the size and quantity of lumber
- Set up tube and brackets
- Attach lumber
- Attach sheathing
- Add optional side walls

See below for more detailed steps and diagrams.

Set Up Time

Set up time should take approximately 20-30 minutes with at least 2 people.

Material Charts

Most real-world floors and ceilings are framed at 16 or 24 inch on center. These charts will help you figure out how much material is needed for these common spacings with 8 and 12 foot long pieces of lumber. Obviously, more evolutions will require more sheathing and it's always a good idea to get about 25% more lumber than expected.

	Amount of Lumber Needed	
System Width	**16" Spacing**	**24"Spacing**
4'	3	2
8'	6	4
Note: add 2 extra pieces of the same length lumber for tying the bases together, and 1 or 2 extra if cross-brace is needed		

	4x8 Sheathing Needed	
Lumber Length	**4' Width**	**8' Width**
8'	1	2
12'	1.5	3

Inserting and Securing Bolts

When securing bolts with wing nuts, bolts should only be hand tight. **Do not overtighten the bolts.** Overtightening the bolts could lead to permanent bending of the brackets and difficulty removing the bolts. Though uncommon, a bolt may require light tapping with a rubber mallet when inserting or removing due to slight hole size variance and/or powder coating thickness – if this is needed, be sure to use as little force as necessary to get the bolt through.

Assembly – Ceiling Pull

1. Assembling the Structures

a. Start by assembling **(4)** upright structures with connectors mounted at the top:

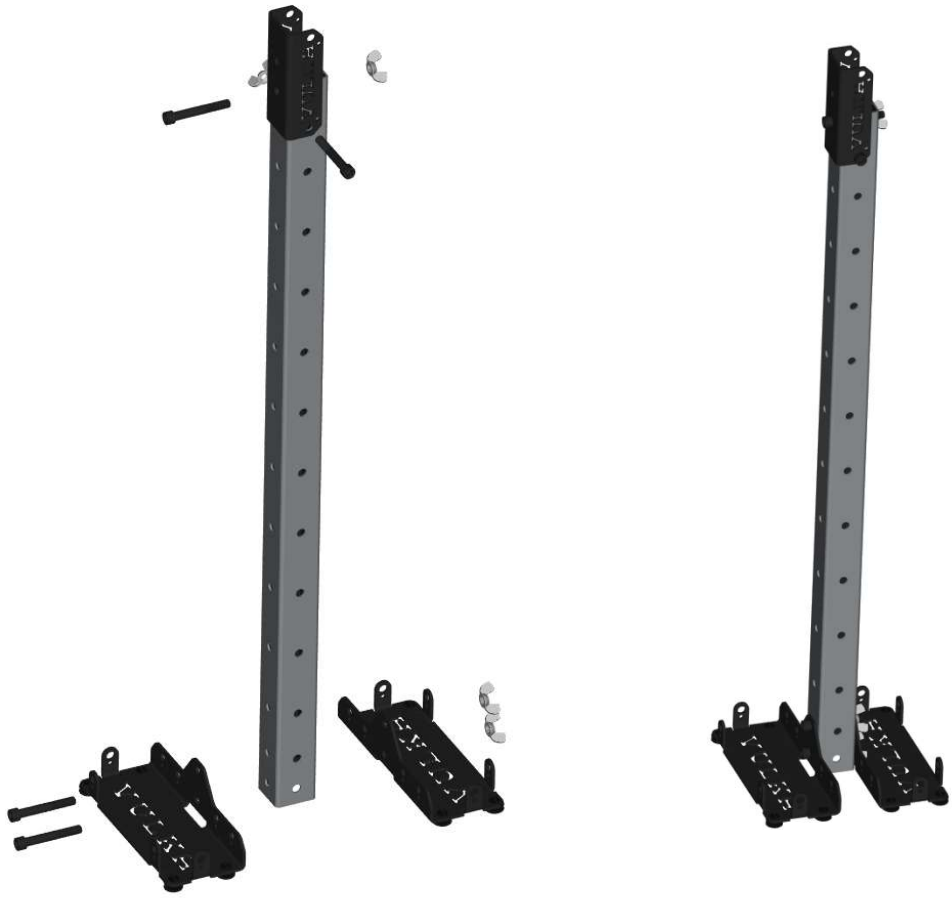

b. Assemble (2) cross bar brackets at either 4’ or 8’ length. The elbows placed as shown below will provide the maximum ceiling height. The 8’ configuration is shown here (4’ length would be a single tube without a connector bracket):

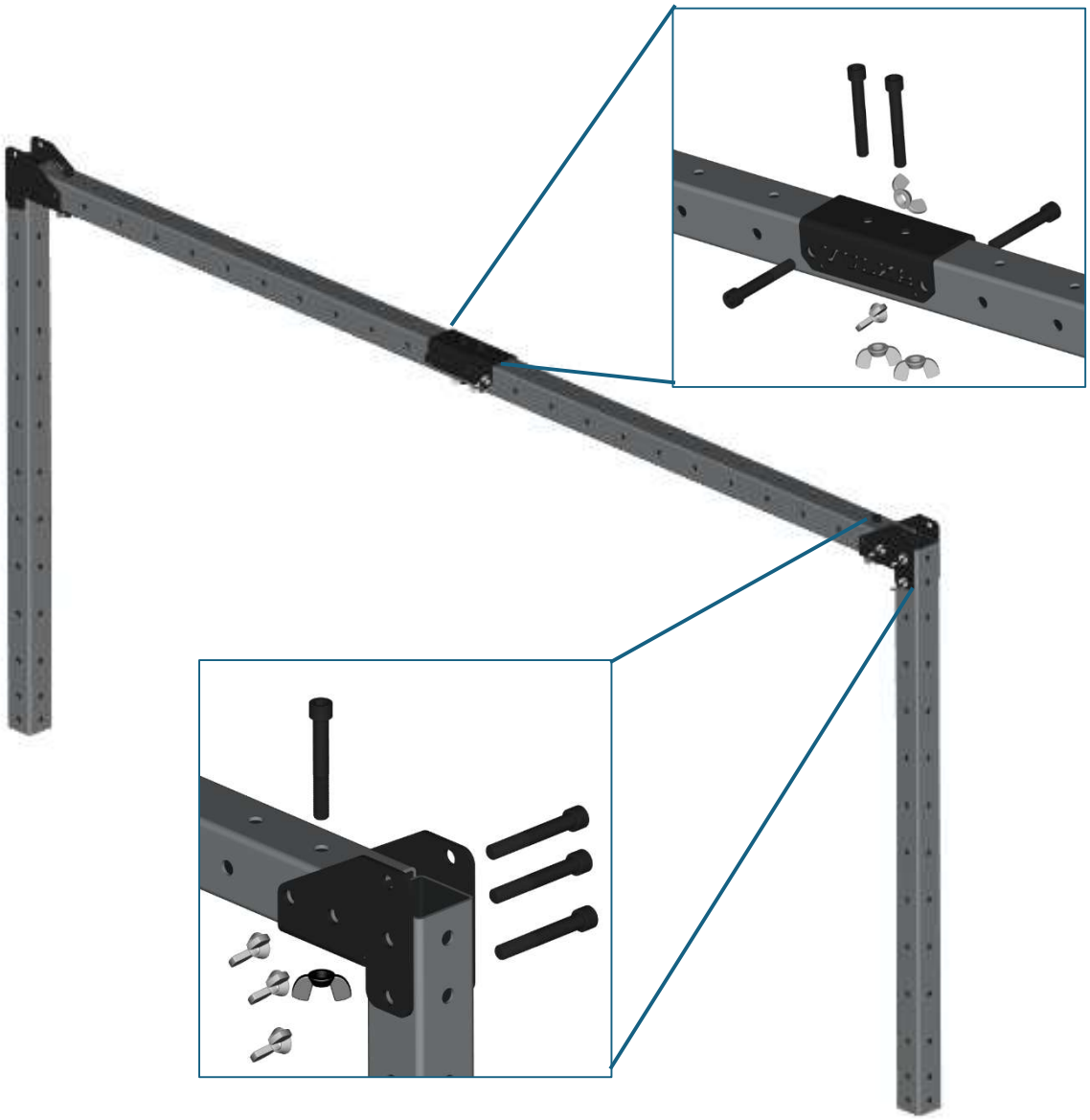

2. Attaching the Brackets

The lumber brackets are designed to hold any lumber with a width of 1.5” (i.e. 2x4, 2x6, 2x8…). The brackets are attached to any hole on the tube (except those used by bases, connectors, and elbows):

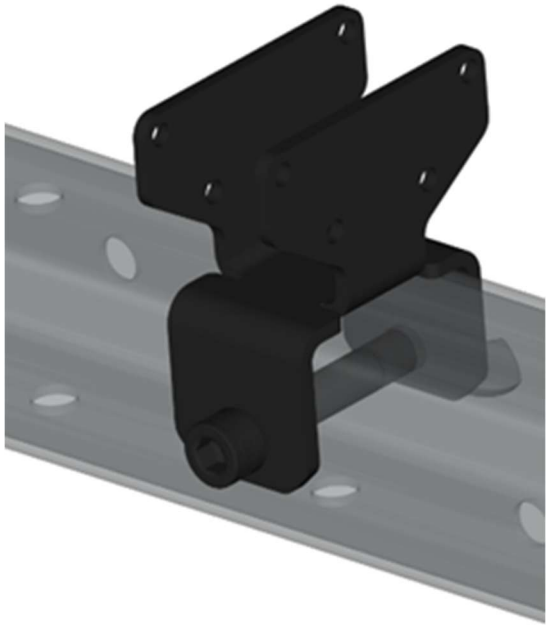

The lumber brackets can be attached at any interval of 4 inches, but typical construction (floors, roofs, and walls) uses either 16 or 24 inches on center. The following diagrams show example configurations to achieve those spacings:

16” O.C. Spacing:

24” O.C. Spacing:

Note: a “cheater” is used on the right side above to reduce the unsupported overhang when sheathing is attached. If an unsupported overhang is acceptable for the training scenario, this can be removed and all brackets can be shifted over, resulting in the following:

Attaching the brackets to the arches made in step 1 above should give you two arches that look something like this (16” spacing shown here):

3. Connecting the Bases

Before placing the 2 arches on top of the 4 uprights, the uprights need to be tied together for stability as shown below. For a standard 8’ drywall sheet configuration, 10’ lumber should be utilized so overhang can be provided and to ensure there is enough space between the uprights to fit the sheets of plywood:

The lumber should be attached as shown below, with roofing screws through the ¼” tab holes and into the lumber using both tabs on each base, with the end of each piece of lumber lined up with the far edge of the base:

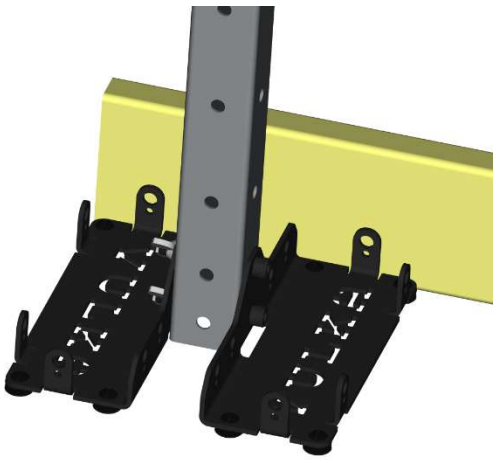

4. Assembling the System

Using at least two people, place the arches into the connectors on both sides and secure with bolts. The resulting structure should look like this:

5. Adding the Ceiling Lumber

The system is now ready to accept the ceiling joist lumber. Once in place, secure each piece with at least 2 metal-to-wood roofing screws in each bracket:

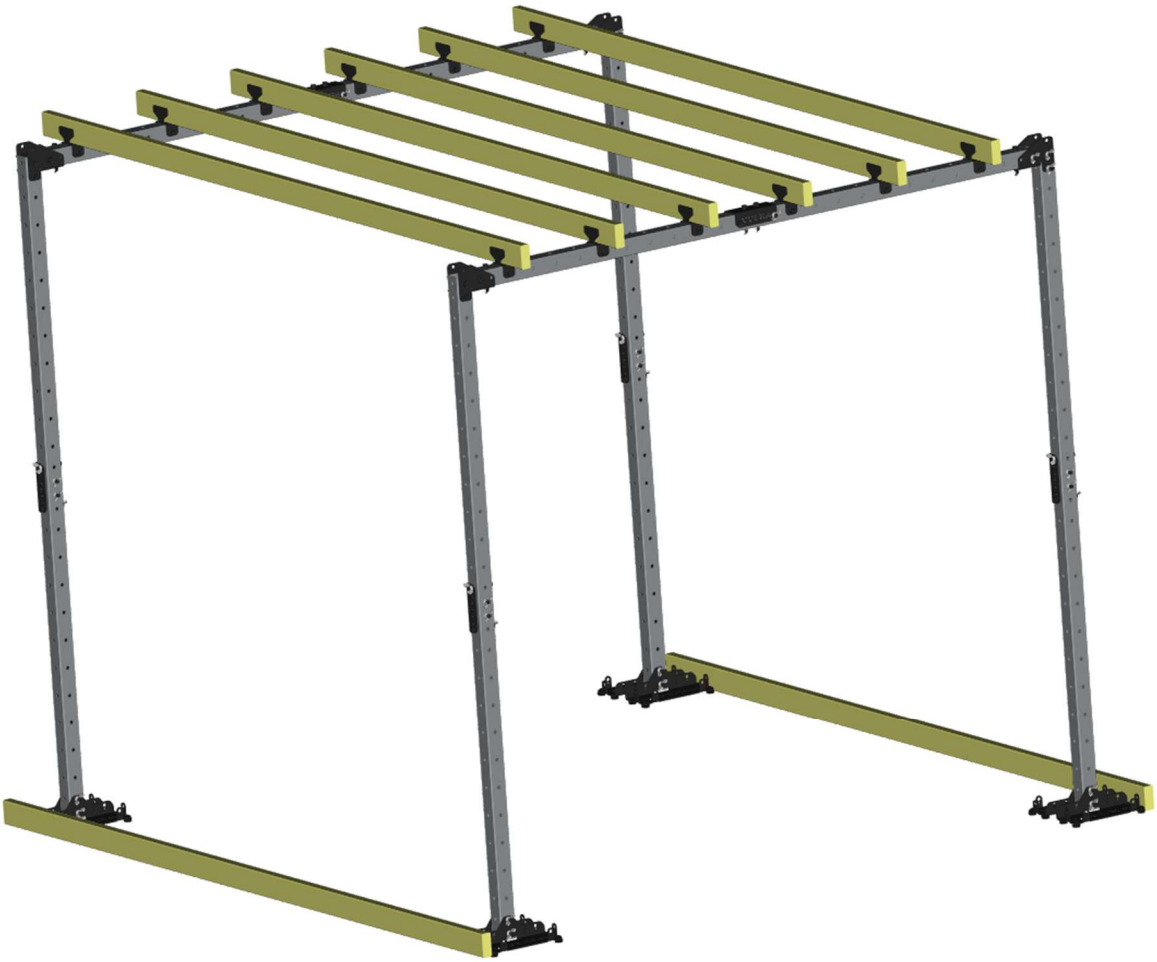

6. Attaching the Drywall

Drywall is attached directly to the underside of the ceiling joists with drywall screws.

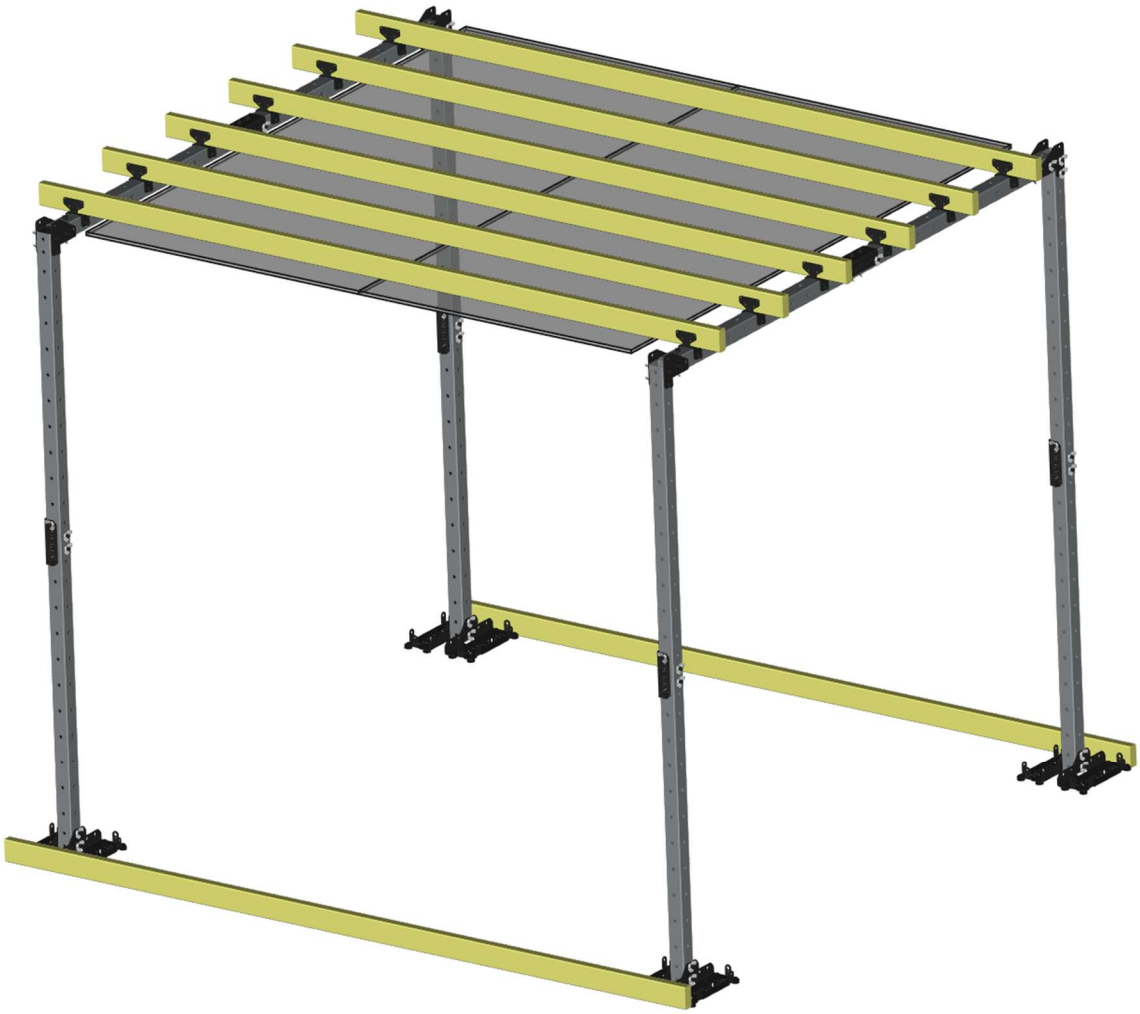

VULKA
FIRE EQUIPMENT

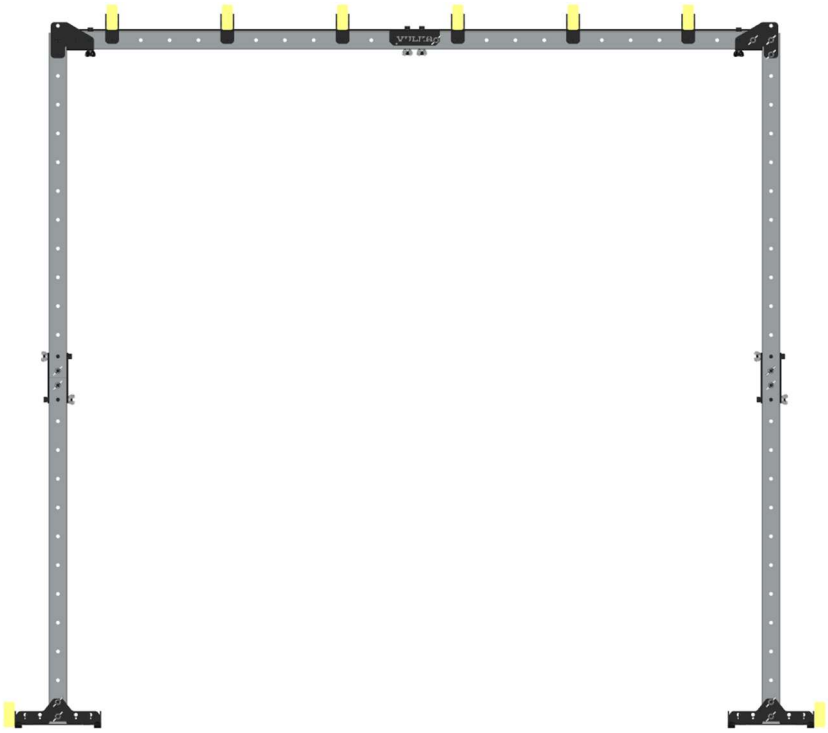

Final Assembly

Before use, be sure to verify that all bolts are in place and hand tight, and all lumber is secured with screws. This configuration is not intended to support weight on top of the ceiling joists. Refer to the flat roof configuration for weight bearing platforms.

At this point, the VTS is ready for use. Additional materials (insulation, wires, etc.) can be placed if desired. Sheathing can be replaced as needed by simply backing out the screws and placing new sheathing. Replace the joist lumber if it has been compromised. Review safety precautions before training begins.

Adding a Wall Structure

Walls can be added to the sides of the structure to simulate opening up or overhauling vertical surfaces. This guide shows a single side, but the process is repeatable for both sides of the structure, giving 2 walls and a ceiling to open up.

Materials Needed:

- Lumber that is the same or greater length as the tube segments comprising the width of the structure (4' for 1 tube segment, 8' for 2 tube segments). Can be 2x4 since this is non-load bearing. For a single wall, only 1 piece is needed, for a wall on both sides, 2 pieces are needed.
- Lumber for the vertical studs of the wall (2x4. 10' length recommended).
- Drywall (½" or ¾")
- Screws for attaching lumber to lumber. Drywall or wood screws (2" or greater) are typically okay.
- Screws for attaching lumber to brackets. Metal to wood roofing screws (#8-#14, 1.5" length) are recommended since they provide a gasket to cushion the metal bracket.
- Vulka Spacing Jig recommended (*included in Convenience Pack Add-on*)
- Same tools listed at the beginning of this guide

Assembly – Parapet/Wall

1. Create a bottom plate that is the same or greater length as the tube segments. Attach the lumber to the **outside** of base plate tabs with roofing screws through the ¼" holes, and directly to the existing base plates with drywall/wood screws, as shown below (a 10' 2x4 was used in this example):

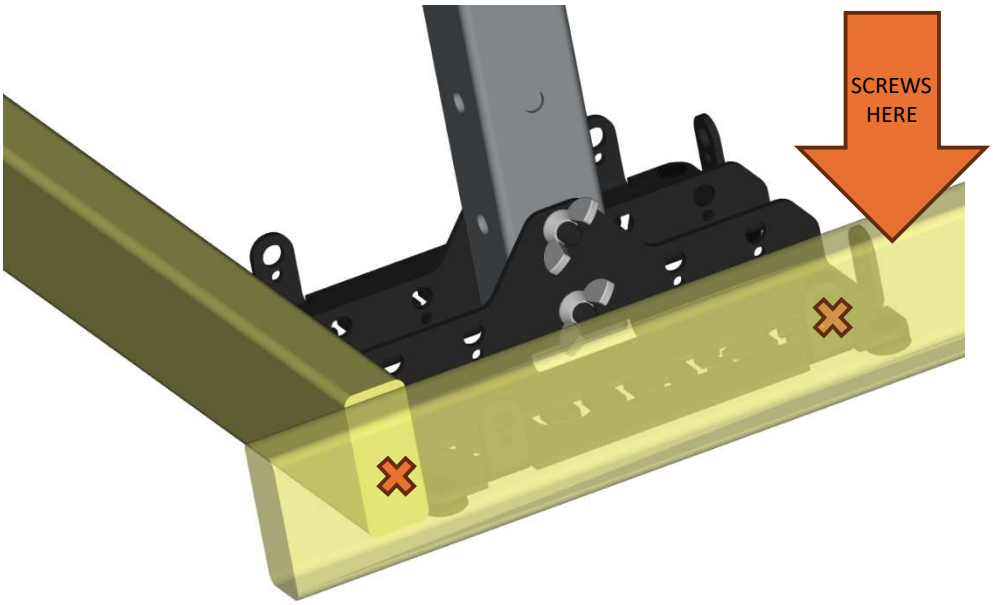

With both sides secured, it should look like this:

2. Place studs at desired intervals. Depending on the desired spacing, the stud can be secured to the side of an existing floor joist, a bracket can be placed to achieve a different spacing, or a combination of both methods can be used. Both options are shown below. The bottom of the stud is secured to the bottom plate. Use at least 2 screws at each connection point.

   This is where a framing square/level or the Vulka Spacing Jig (*included in Convenience Pack Add-on*) will help ensure the studs are straight. Note that with a bracket the lumber should not sit all the way in the back of the channel or it will cause the wall to lean.

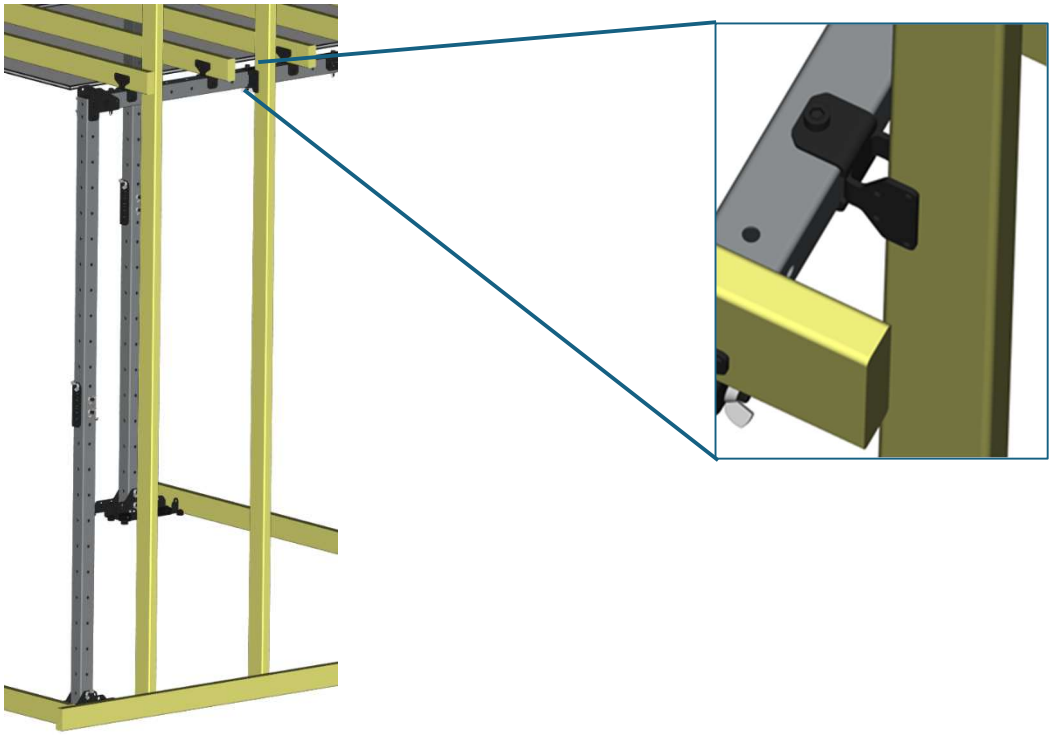

Shown here is an example that has 16” O.C. floor joists. Using a combination of the methods above, a ~24” O.C. wall stud spacing was achieved.

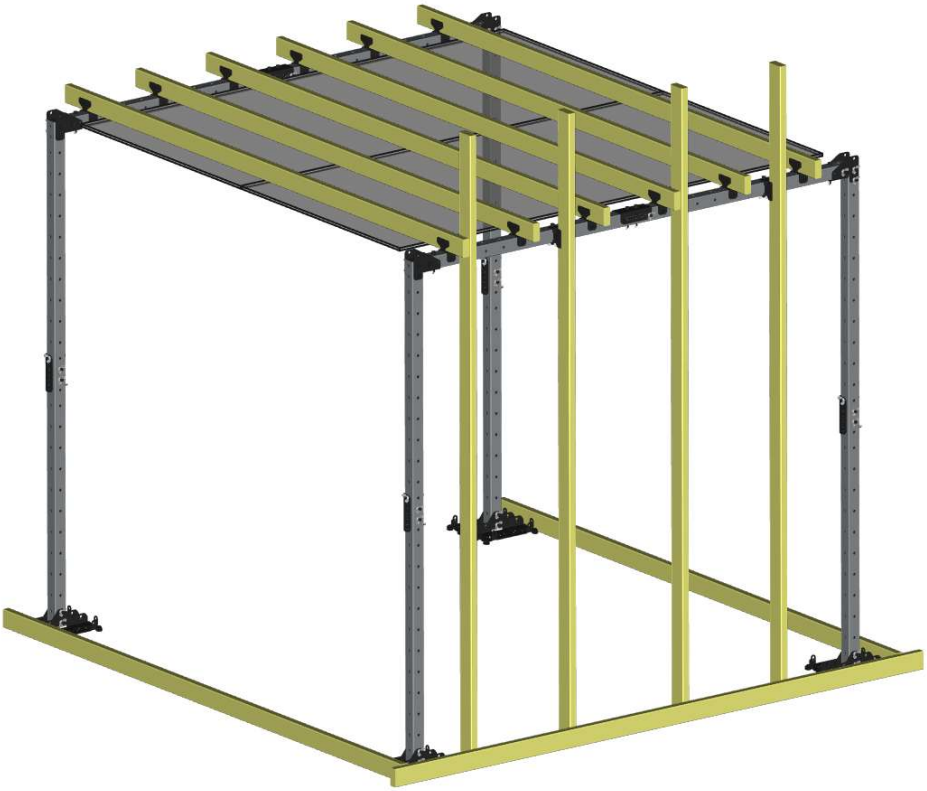

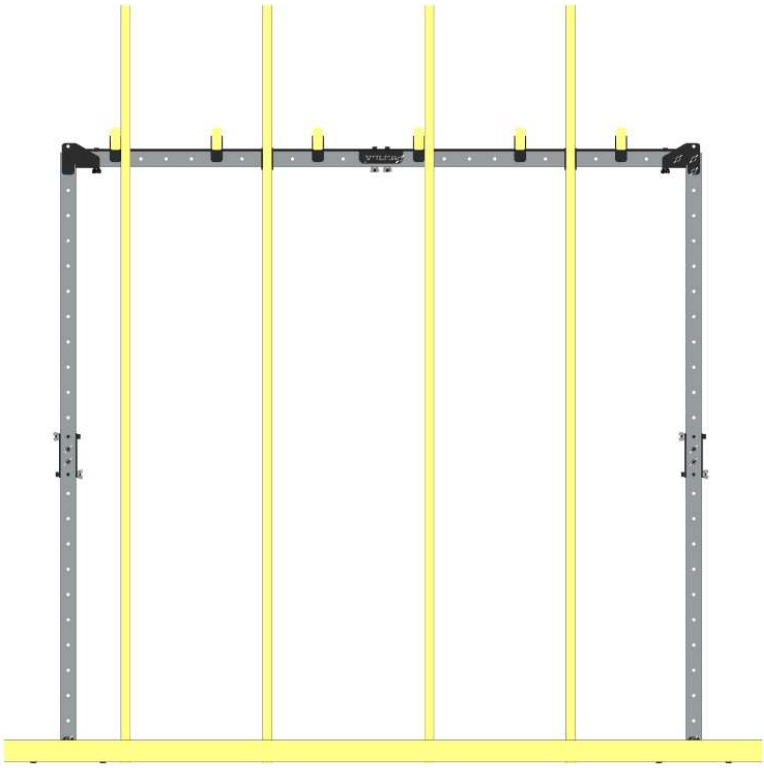

3. Attach drywall with drywall screws. Before use, be sure to verify that all bolts are in place and hand tight, and all lumber is secured with screws. This configuration is not intended to support weight on top of the ceiling joists. Refer to the flat roof configuration for weight bearing platforms.

   At this point, the VTS is ready for use. Additional materials (insulation, wires, etc.) can be placed if desired. Sheathing can be replaced as needed by simply backing out the screws and placing new sheathing. Replace the joist lumber if it has been compromised. Review safety precautions before training begins.

.

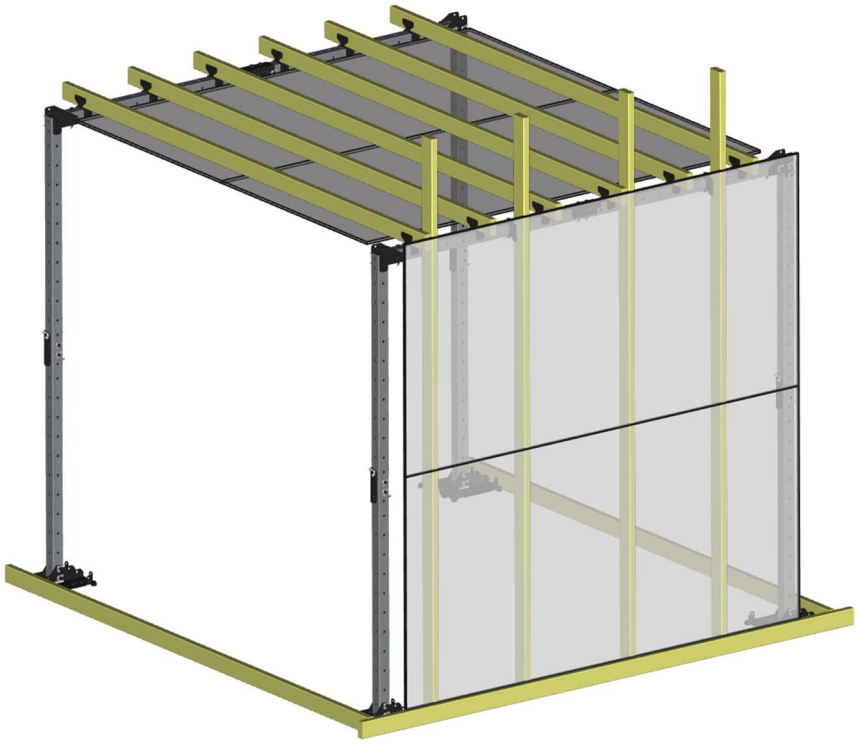

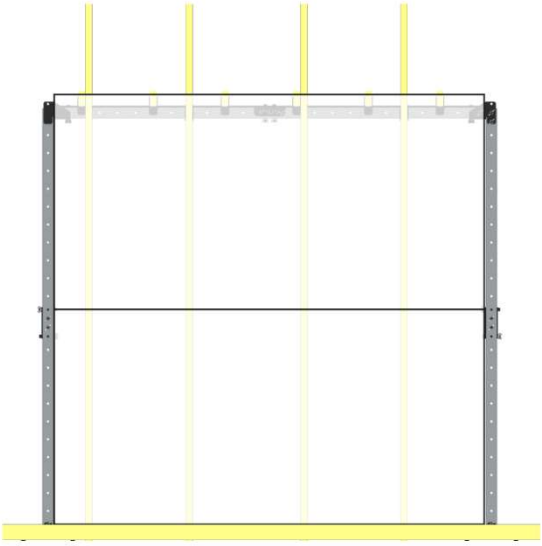

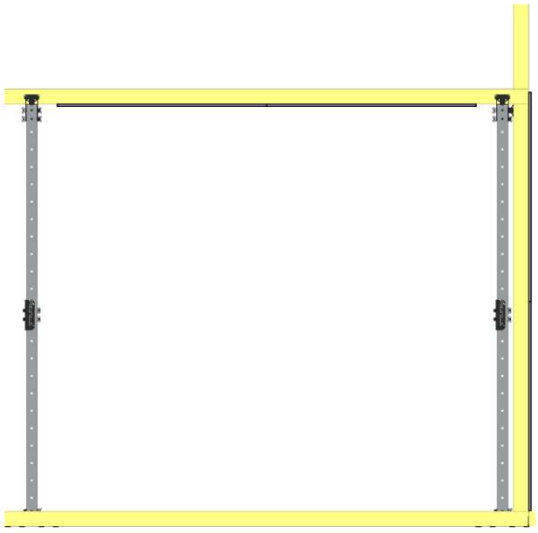

Question? Concerns? Improvements?

Please be sure to reach out to us at support@vulkafire.com !

General information and additional configurations are available in their own Field Guide. Please be sure to check vulkafire.com.

Add-ons for the VTS are also available at vulkafire.com!

END OF GUIDE